Ferroli

i migliori gradi centigradi

FCP 20-V - 30-V - 40-V

Wall-mounted Fan coil

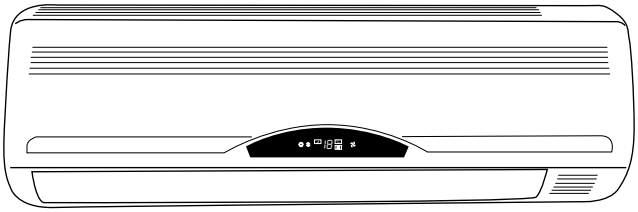

CE

GB **INSTALLATION AND OPERATION MANUAL**

Dear customer,
Thank you for having purchased a **FERROLI** air conditioner. It is the result of lengthy experience, dedicated planning research and has been made with top-quality materials and avant-garde technologies. Moreover, the CE marking guarantees that the appliance complies with the European Machine Directive governing safety matters. The quality level is constantly supervised, thus **FERROLI** products stand for Safety, Quality and Reliability.
Ask the Dealer from whom you purchased the appliance for the address of our nearest Assistance Service if you do not already know it.
The information in this manual may be subjected to modifications following product improvements.

Thank you once again
FERROLI S.p.A

TABLE OF CONTENTS

GENERAL SPECIFICATIONS **4**
WHEN THE MACHINE ARRIVES 4
FOREWORD 4
DECLARATION OF CONFORMITY 4
TECHNICAL SPECIFICATIONS 5
OVERALL DIMENSIONS 5

SAFETY REGULATIONS **6**

MACHINE INSTALLATION **7**
PACKING AND STORAGE 7
ELECTRICAL CONNECTION OF THE UNIT 7
ELECTRICAL CONNECTIONS 7
WIRING DIAGRAMS 8
INSTALLATION OF THE UNIT 8
OTHER POSITIONS FOR INSTALLATION 10
WET CONNECTIONS 11
CONDENSATION DRAINAGE 11
AIR VENT 12

SETTING AT WORK **13**
USE OF THE REMOTE CONTROL 13
INDICATOR “LED” OF THE INDOOR UNIT 14
PROBE AUTODIAGNOSIS 14
DESCRIPTION OF THE OPERATING MODES 14
TIMER PROGRAMMING 15
EMERGENCY KEY OF THE UNIT 15

ROUTINE MAINTENANCE **16**
HOW TO CLEAN THE FILTERS OF THE UNIT 16
HOW TO CLEAN THE UNIT 16

GENERAL SPECIFICATIONS

WHEN THE MACHINE ARRIVES

As soon as the machine arrives, it is essential to check to make sure that all the materials listed in the shipping document have been consigned and that none of the parts has sustained damage due to transport. If damage
is discovered, immediately notify the haulage contractor of its entity and inform our customer management
office. Only in this way will you be able to receive the missing materials or reimbursement of damages in the fastest possible way.

FOREWORD

The conditioner is a machine that has been exclusively designed and built for air conditioning and must only be used for that purpose.
The machine can only operate well and be used in a profitable way if it is used correctly and kept in a fully efficient condition. Please read this instruction manual carefully and consult it whenever difficulties or doubts arise when the conditioner is used. Please remember that our assistance service, organized in collaboration with our dealers, is always at your disposal for advice and direct interventions when necessary.

DECLARATION OF CONFORMITY

The company hereby declares that the machine in question complies with the matters prescribed by the following Directives:

- Machine Directive **98/37 EEC**
- Low voltage Directive **73/23 EEC**
- Electromagnetic compatibility Directive **EMC 89/336 EEC**

GENERAL SPECIFICATIONS

TECHNICAL SPECIFICATIONS

MOD.		UM	20	30	40
Heating capacity (1)	max.	[W]	3400	4500	6600
	med.	[W]	2900	3800	5500
	min	[W]	2550	3300	4800
Water flow rate (1)		[l/h]	292	387	568
Water pressure drop on wet side (1)		[Kpa]	14,0	17,0	24,0
Heating capacity (2)	max.	[W]	2500	3400	5000
Water pressure drop on wet side (2)		[Kpa]	14,0	18,0	31,0
Cooling capacity (3)	max.	[W]	1800	2700	3700
	med.	[W]	1400	2250	3100
	min	[W]	1200	2000	2700
Water flow rate (3)		[l/h]	310	464	636
Dehumidification at max speed(3)		[g/h]	400	850	1110
Sensible cooling capacity at max speed (3)		[W]	1530	2100	2960
Water pressure drop on wet side (3)		[Kpa]	17	21	37
Air flow rate	max.	[m³/h]	380	500	730
	med.	[m³/h]	260	410	600
	min	[m³/h]	200	350	520
N° fans		N°	1	1	1
Sound pressure (4)	max.	[dB(A)]	41	42	47
	med.	[dB(A)]	35	40	45
	min	[dB(A)]	32	37	43
Power input		[W]	30	36	46
Wet connections	*F*	["]	1/2" F	1/2" F	1/2" F
Condensation drain pipe diameter	*F*	[mm]	16	16	16
three-way valve connection	Type	-	electronic ON-OFF		
	Ø	["]	1/2"	1/2"	1/2"
Packaging dimension	L	mm	865	1100	
	H	mm	285	290	
	D	mm	340	380	
Net weight indoor unit		kg	8	14	
Gross weight indoor unit		kg	10	15	

NOTES:
(1) Operation in the Heating mode. The data refer to:
- Inlet Water temperature: **70°C , Δt water 10°C**
- Ambient Air temperature **20°C D.B.**
(2) Operation in Heating mode. The data refer to:
- Inlet Water temperature **50°C, Δt water 5°C**
- Ambient Air temperature **20°C D.B.**
(3) Operation in the Cooling mode. The data refer to:
- Inlet Water temperature: **7°C , Δt water 5°C**
- Ambient Air temperature **27°C D.B., 19°C W.B.**
(4) Sound pressure in a 100 m^3 room with 0.5 sec. reverberation time.
(NOTE): the water pressure drops on the wet side are inclusive of losses from the valve.

OVERALL DIMENSIONS

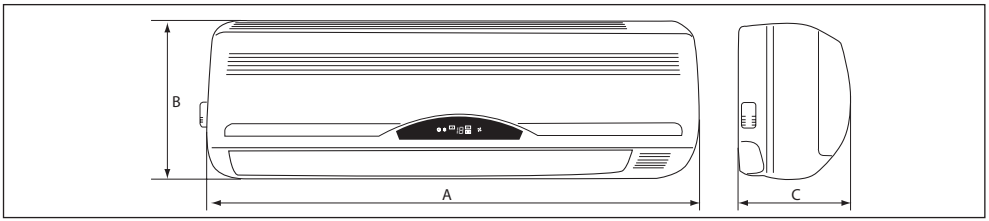

Mod.	UM	20-V	30-V	40-V
A	mm	790	1030	1030
B	mm	270	310	310
C	mm	190	205	205

SAFETY REGULATIONS

Strictly comply with the following regulations to prevent injuries to the operator or damage to the machine.

- The machine must be installed in compliance with the laws in force in the country of use.
- This installation manual, the operating instructions and the wiring diagrams are an integral part of the machine. They must be kept with care and be ready to hand for consultation when required.
- Failure to comply with the instructions in this manual and inadequate installation of the conditioner may void the warranty. Moreover, the Manufacturer shall not be liable for any direct and/or indirect damages due to incorrect installation.
- All supplementary maintenance operations must be carried out by specialized and authorized personnel.
- Work in a clean, uncluttered place when installing the appliance.
- It is absolutely forbidden to touch moving parts or to get between the same.
- Before starting the conditioner, make sure that the various components and the entire system are in perfect and safe conditions.
- Strictly comply with the routine maintenance operations.
- If parts need changing, insist on genuine spares. Failure to do so will void the warranty.
- Do not remove or tamper with the safety devices.
- Disconnect the electric power source before proceeding with any work on the machine.
- The coil surface is sharp. Do not touch it without protective gloves.
- Carefully read the stickers on the machine. Never cover them. Replace them immediately should they be damaged.
- Do not use the machine in an explosive atmosphere.
- The power line must be regularly grounded.
- If the power cable has been damaged, stop the machine if it is operating, and have the flex immediately replaced by an authorized electrician.
- The machine must be stored at a temperature between -25°C and 55°C.
- Use a powder extinguisher in the event of a fire outbreak. Do not use water.
- If the power cable has been damaged, stop the machine if it is operating, and have the flex immediately replaced by an authorized electrician.
- All supplementary maintenance operations must be carried out by specialized and authorized personnel.
- The appliance must not be dumped if it is to be scrapped since it contains materials that must be recycled or disposed of by authorized centers.
- Do not wash the machine with direct or pressurized jets of water or with corrosive substances.
- The temperature of the cold water must not be less than 5°C (to prevent condensation from forming). The temperature of the water must not exceed 70°C. The water must be clean and with a pH between 6.5 and 7.5.
- When the unit remains at a seasonal standstill, the coils must be filled with water to reduce the risk of oxidation. The appliance must be protected against freezing temperatures during winter.

The Manufacturer and dealer network are at your disposal and will provide prompt and accurate technical assistance to ensure that your conditioner always operates in the best and most efficient way.

MACHINE INSTALLATION

PACKING AND STORAGE

All the models are provided with their own specific cardboard boxes.
The units must be moved by hand.
The box containing the unit gives instructions about how to handle the machine correctly when it is stored and installed.
The machine must be stored at a temperature **between -25°C and 55°C**.

NOTE. Do not dispose of the packing materials in the environment.

Once you have decided where to install the unit (consult the relative sections of this manual), proceed by unpacking it in the following way:

1. Cut off the two nylon straps.
2. Open the top side of the box.
3. Take hold of the unit and lift it fully out of the box.
4. Remove the side protections and take off the nylon wrapping.

Fig.1

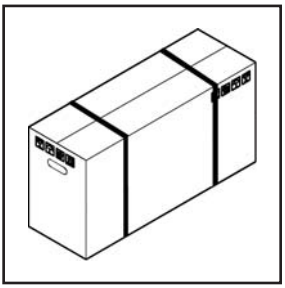

UNITS OPENING

1. Remove the screws and take off the front panel.
2. Procede with the installation on procedure.
3. Close everything.

Fig.2

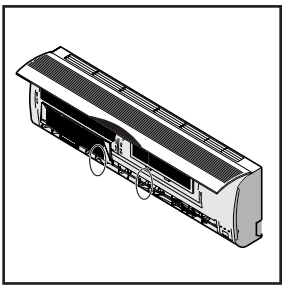

ELECTRICAL CONNECTIONS

If the unit is supplied with a plug, as indicated on the wiring diagrams, it is connected by simply inserting the plug of the interior unit into a mains socket. The exterior unit draws its power from the interior one.
Comply with the instructions given in the “Electrical connections” section for the other units.

NOTE: The power cable’s socket must be equipped with a regulation ground contact so as to comply with the indications in the technical specifications table.

Fig.3

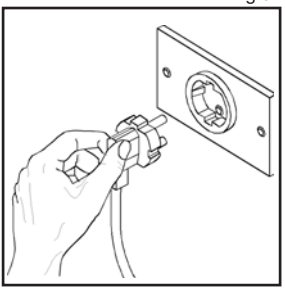

MACHINE INSTALLATION

WIRING DIAGRAMS

To allow the conditioner to operate, the electrical connections must be made as indicated on the wiring diagrams supplied with the machine. **It is essential for the units to be connected to an efficient ground ground system.** The manufacturer declines all liability for failure to comply with this precaution.

NOTE: Refer to the wiring diagrams supplied with the machine for all work involving the electrical system.

Model 20-V

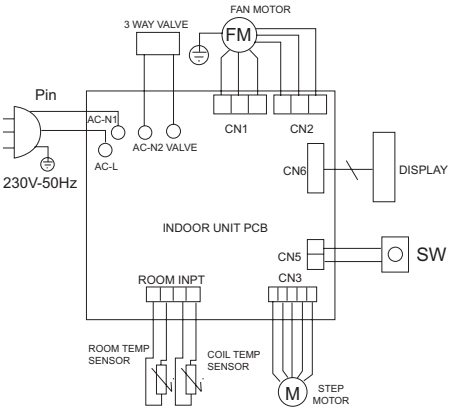

Models 30-V / 40-V

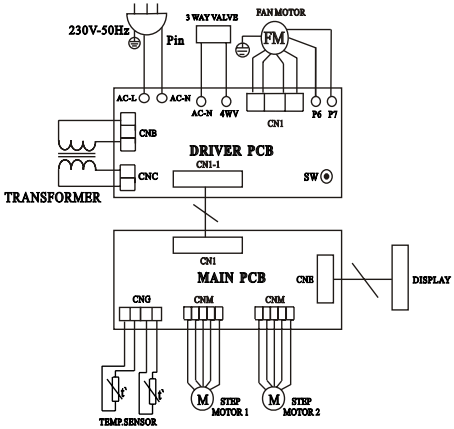

INSTALLATION OF THE UNIT

Choice of the installation site. In compliance with the conditions, position the unit as low as possible, but always ensure that there is 10 cm free space above it. Before fixing the unit to the wall, make sure that this latter is able to bear the weight of the machine, that the air flow is not obstructed by curtains or other, and that the position is able to guarantee that the ais apreads in an optimal way around the room.

Installation. Once the position of the interior unit has been chosen, use the fixing plate (**Fig.1**) as a template so as to identify the exact positions of the expansion plugs and the hole that passes through the wall.

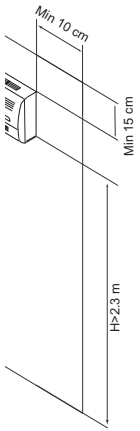

MACHINE INSTALLATION

Model 20-V

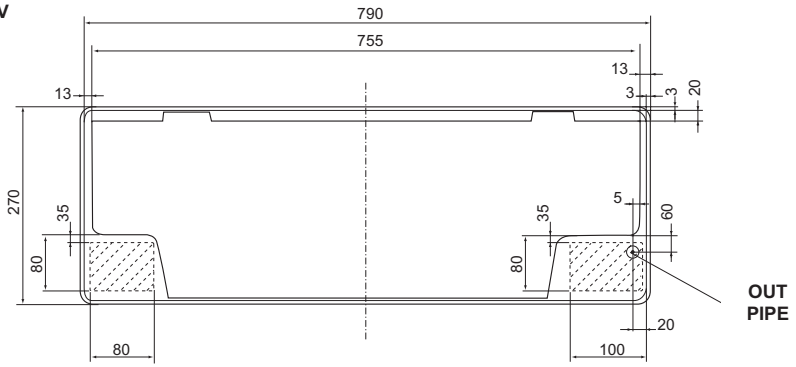

Fig.1

Models 30-V / 40-V

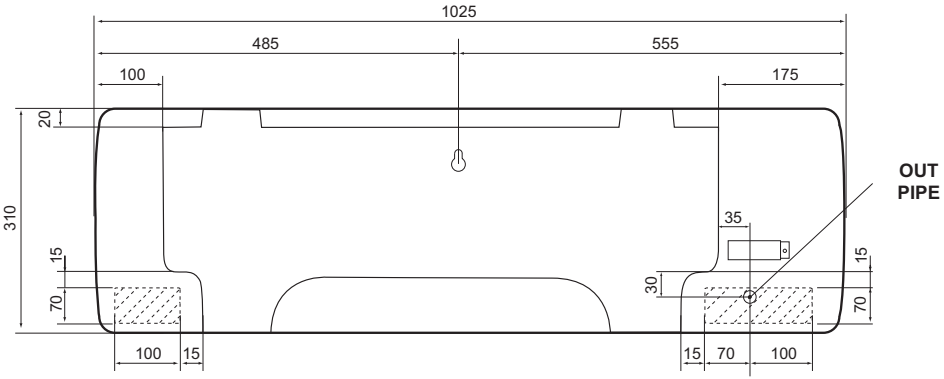

The plastic casing of the unit has pre-cut holes which can be removed if necessary, so as to route the cooling pipes and cables.

Fig.2

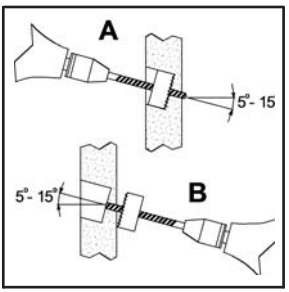

Proceed as described below:

1. Place the plate on the wall at the appropriate height and fix it in place, keeping it as horizontal as possible (use a level).
2. Mark the positions of the fixing holes.
3. Using a drill and a Ø 8 mm bit, make the holes and insert the expansion plugs.
4. Choose the side on which the connection pipes must exit. It is advisable to use the rear outlet on the right. Consult the "**OTHER POSITIONS FOR INSTALLATION**" section.
5. Make a Ø 70 mm hole in the wall (**Fig.2**), slightly slanting towards the outside. Now begin to drill on one side of the walll (**A)** and terminate from the opposite side (**B**) to prevent the wall from crumbling.
6. Using the relative screws, fix the plate in the four holes made previously.

7. Raise and carefully turn the pipe sections required for connecting to the exterior unit and route them through the Ø 70 mm hole.
8. Route the condensation drain pipe through the same hole. Depending on personal requirements, this pipe can also be routed in other directions, so long as it slopes sufficiently to allow the condensation to drain away properly.
9. Hang the interior unit securely on the hooks of the fixing plate.
10. Make sure that the unit has been firmly fixed by moving it towards the right and left.

NOTE: To make it easier to fix the unit to the plate, keep the lower part of the unit raised then lower it perpendicularly into position, accompanying the sheath as this is done (**Fig.3**).
The installer's experience will allow all these operations to be perfected to suit the specific requirements.

Fig.3

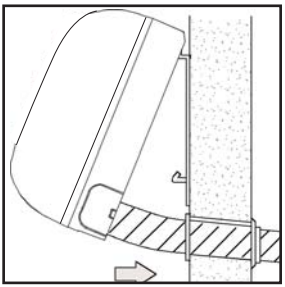

OTHER POSITIONS FOR INSTALLATION

The unit can also be installed in the following positions:
1. With outlet at the rear left
2. With outlet at the side, on the left
3. With outlet at the side, on the right
4. With outlet pointing downwards

Fig.4

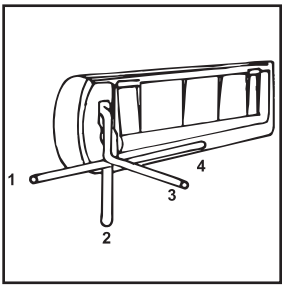

Proceed as indicated below to install the unit with the outlets at the rear left:
1. Make the Ø 70 hole near the left-hand outlet.
2. Make the wet connections between the pipes of the interior unit and those of the exterior unit.
3. Position the pipes in the housing in the interior unit and fix them in place with the relative plate as shown in the figure alongside (**Fig.5**).

Fig.5

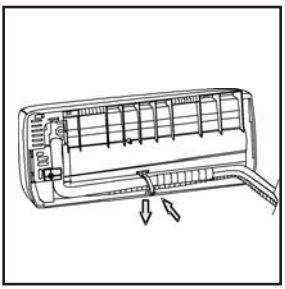

Proceed as described below to install the unit with outlets at the side or pointing downwards:
1. Detach the pre-cut plate (**Fig.6**) from the direction required.
2. Turn the pipes carefully to the required direction.
3. Make the cooling pipe connections between the pipes of the interior unit and those of the exterior unit.

Fig.6

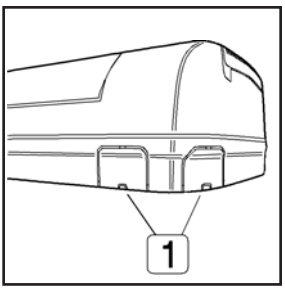

MACHINE INSTALLATION

WET CONNECTIONS

The unit has wet connections with threads as those listed in the table below and flat seals.

Model	Couplings
20-V	1/2”
30-V	
40-V	

PIPE INSULATION

1.The insulation must cover both the water inlet and outlet pipes as illustrated.
2.Use polyethylene insulation at least 8 mm thick.

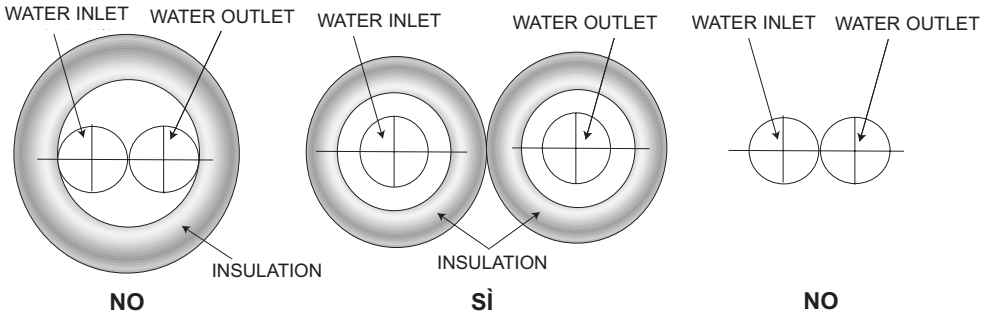

CONDENSATION DRAINAGE

The following procedure makes sure that any condensation that forms flows correctly out of the machine.
1. Connect the condensation drain pipe.
2. Make sure that the drain pipe has no traps or elbows that prevent the condensation from flowing out.
3. Make sure that the condensations flows out correctly by pouring water into the tray and ensuring that it flows out of the drain pipe installed.

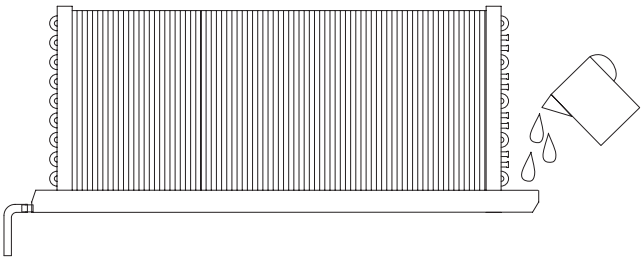

AIR VENT

1.Connect the water inlet and outlet pipes and, power the unit and set it to the cooling mode, making sure that the valve opens.
This allows water to start entering the coils.

2. Check to make sure that there are no leaks from the wet connections.
If there are no leaks, open the air vent will now start to leave the coils.

Warning: take care not to touch any live electrical parts whilst this operation is being carried out.

3. Shut off the air vent.

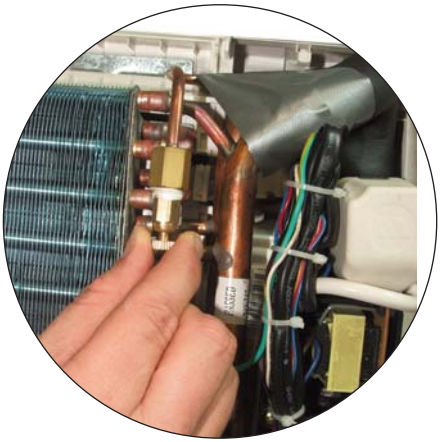

SETTING AT WORK

USE OF THE REMOTE CONTROL

The remote control has a set of keys and a display that shows all the functions activated along with the parameters the user and installer need to correctly operate the unit. The keys are:

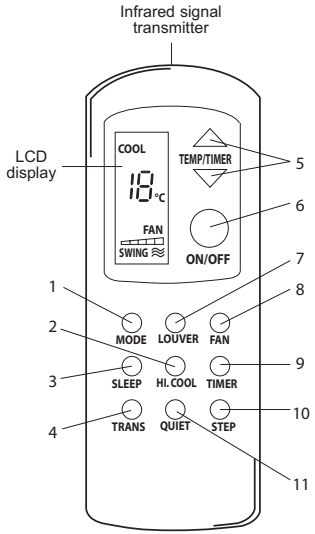

1. MODE: Selects the operating mode:

Cooling, Ventilation only and Heating.

Note: Even if they are displayed, the Auto and Dry functions are not available for these units.

2. HI COOL: Fast cooling. Press this key in the Cooling mode, to activate/deactivate the fast cooling mode.

3. SLEEP: Used to enable / cancel the Sleep mode, regardless of the mode in which the unit is operating.

4. TRANS: Sends a signal, to transmit the settings made via the unit's remote control.

5. ▲ TEMP / TIME ▼ . Keys for selecting the **"TEMPERATURE/TIME"**. Allow the user to select the ambient temperature in the room and the timer clock: (▲) increases the setting, (▼) decreases it.

6. ON/OFF: Turns the unit on and off.

7. LOUVER: Activates/deactivates the automatic movement of the air deflector.

8. FAN: Button to select the speed of the fan or for automatic speed selection.

9. TIMER: Key for selecting the TIMER-OFF programmed switch-off function for the unit.

10. STEP: Sets the unit's deflector in a certain position.

11. QUIET: Allows the unit to function in the silent mode..

DISPLAY

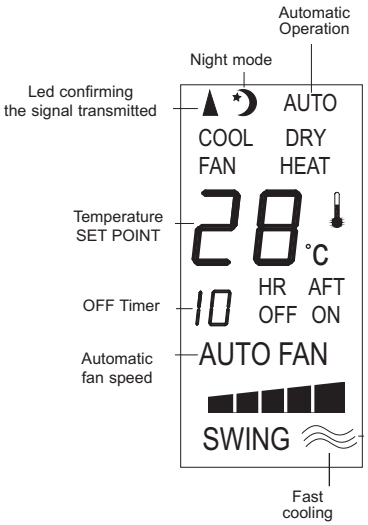

SETTING AT WORK

INDICATOR “LED” OF THE INDOOR UNIT

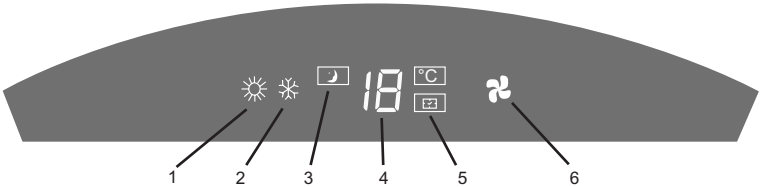

The following is a description of the meaning of the LEDS on the front part of the indoor unit as they come on:

1. HEATING MODE INDICATOR
Units run when setting temp is lower than the room temperature.
2. COOLING MODE INDICATOR
Units run when setting temp is upper than the room temperature.
3. SLEEP INDICATOR
Units run in sleep mode.
4. TEMP INDICATOR
Display the room temp.
5. TIMER INDICATOR
6. INDICATOR FAN MODE
Activa in fan mode selection.

PROBE AUTODIAGNOSIS

The unit has a monitoring function that checks for probe and motor faults.
If the control detect a wrong thermistor resistance valve a temperature value the following error code:
E1: check the ambient will display
E2: check the pipe will display
E3: control the fan motor

DESCRIPTION OF THE OPERATING MODES

The following operating modes are available:

Operation in the Cooling mode: this function is obtained by pressing the “**MODE**” key until the relative “COOL” symbol appears on the display. The unit begins to operate if the temperature setting is less than that of the environment. Available operating range: 18-30°C; preset temperature 25°C.
Ventilation mode: allows the air to circulate around the surrounding room in the automatic mode, at the speed set by means of the Fan key: Auto, High, Medium or Low.
Operation in the Heating mode: this function is obtained by pressing the “**MODE**” key until the relative “**HEAT**” symbol appears on the display. The unit begins to operate if the temperature setting is higher than that of the environment. The fan of the interior unit only starts to operate when a certain temperature has been reached in the heat exchange coils. Available operating range: 18-30°C; preset temperature 20°C.
Operation in the Fast Cooling mode: this function is obtained by pressing the “**HI.COOL**” key (the relative symbol will appear on the display) and allows the set temperature to be reached more rapidly than the normal operating mode.
SLEEP mode: press the “**SLEEP**” key to preset the machine for the overnight mode, shown by the relative symbol on the display.
1-nin the Cooling mode (“**COOL**”), the temperature increases 1°C per hour for the first two hours of operation, after which it remains constant.
2-nin the Heating mode (“**HEAT**”), the temperature decreases 1°C per hour for the first three hours of operation, after which it remains constant.
Silent mode: press the “**QUIET**” key to preset the machine to the silent operating mode.

SETTING AT WORK

TIMER PROGRAMMING

This function is activated via the remote control and merely allows the machine to switch off after the set time.
The TIMER led (orange) will come on to indicate that the function has been activated.
The timer function can be set within the 1 to 12 hour range.

TIMER OFF setting
Press the **TIMER** key once to select the time at which the air conditioner turns off.
- HR OFF will begin to flash on the display (Fig. 1-1)
- press the time selection keys (Fig. 2) to increase/decrease the time setting by 1 hour

Press the **TIMER** key twice to cancel the time setting.

Fig.1

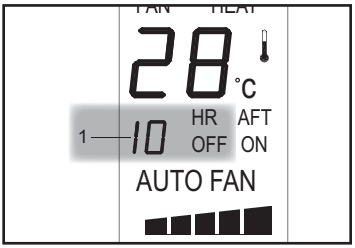

Fig.2

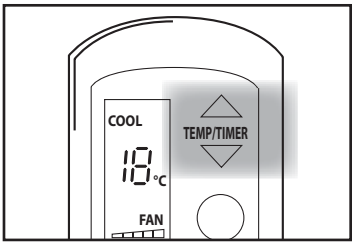

EMERGENCY KEY OF THE UNIT

The **ON/OFF** emergency key is situated on the front of the unit.

It allows the unit to be powered and/or switched off if the remote control is faulty and operates in the following way:

1- If the machine is in the Stand-By status:
Press the Emergency key to activate the Cooling mode (the preset temperature is 25°C).
Press the Emergency key again within 1 second to activate the Heating mode (the preset temperature is 20°C).

2- If the machine is operating:
Press the Emergency key to turn off the machine.

NOTE: The emergency mode must only be used temporarily when the remote control is faulty or has been lost.

Model 20-V

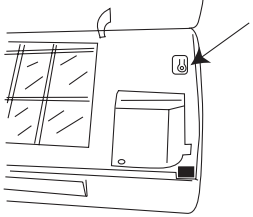

Models 30-V / 40-V

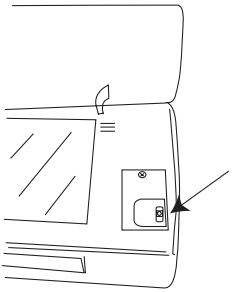

ROUTINE MAINTENANCE

Fig.1

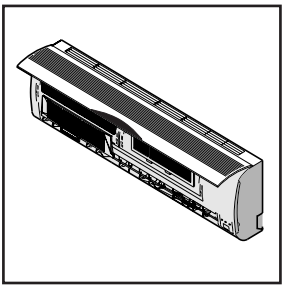

HOW TO CLEAN THE FILTERS OF THE UNIT

The air filter must be checked and cleaned periodically to ensure that the appliance operates correctly. Proceed as described below (**Fig. 1**):

Standard filter

1. Remove the plug from the power socket.
2. Raise the front panel.
3. Remove the intake grille by pulling it outwards.
4. Remove the filters by pushing the central tabs upwards until they have been freed from their retainer, then remove them by pulling them downwards.
5. Wash them with water or clean with a vacuum cleaner.
6. Fit all the parts back in their original positions.

Electrostatic filter with activated carbon

1. Remove the plug from the power socket.
2. Raise the front panel.
3. Remove the intake grille by pulling it outwards.
4. Slip it out of its guide.
5. Only clean with a blast of air. Do not wash with water.

NOTE. This operation must be carried out at least once a month (the frequency with which the filter needs cleaning varies depending on the characteristics and dust in the room where the air conditioner is installed) or when the filter indicator comes on.

Fig.2

HOW TO CLEAN THE UNIT

Proceed as described below (**Fig. 2**) to clean the interior unit:

1. Clean with a damp cloth.
2. Do not direct jets of water on to the unit as this would damage the electrical components.
3. Do not use spirits or other corrosive substances for cleaning purposes.

The manufacturer declines all liability for inaccuracies in this manual when due to printing or typing errors.

Code 3QE24542

Ferroli spa ¬ 37047 San Bonifacio (Verona) Italy ¬ Via Ritonda 78/A
tel. +39.045.6139411 ¬ fax +39.045.6100933 ¬ www.ferroli.it